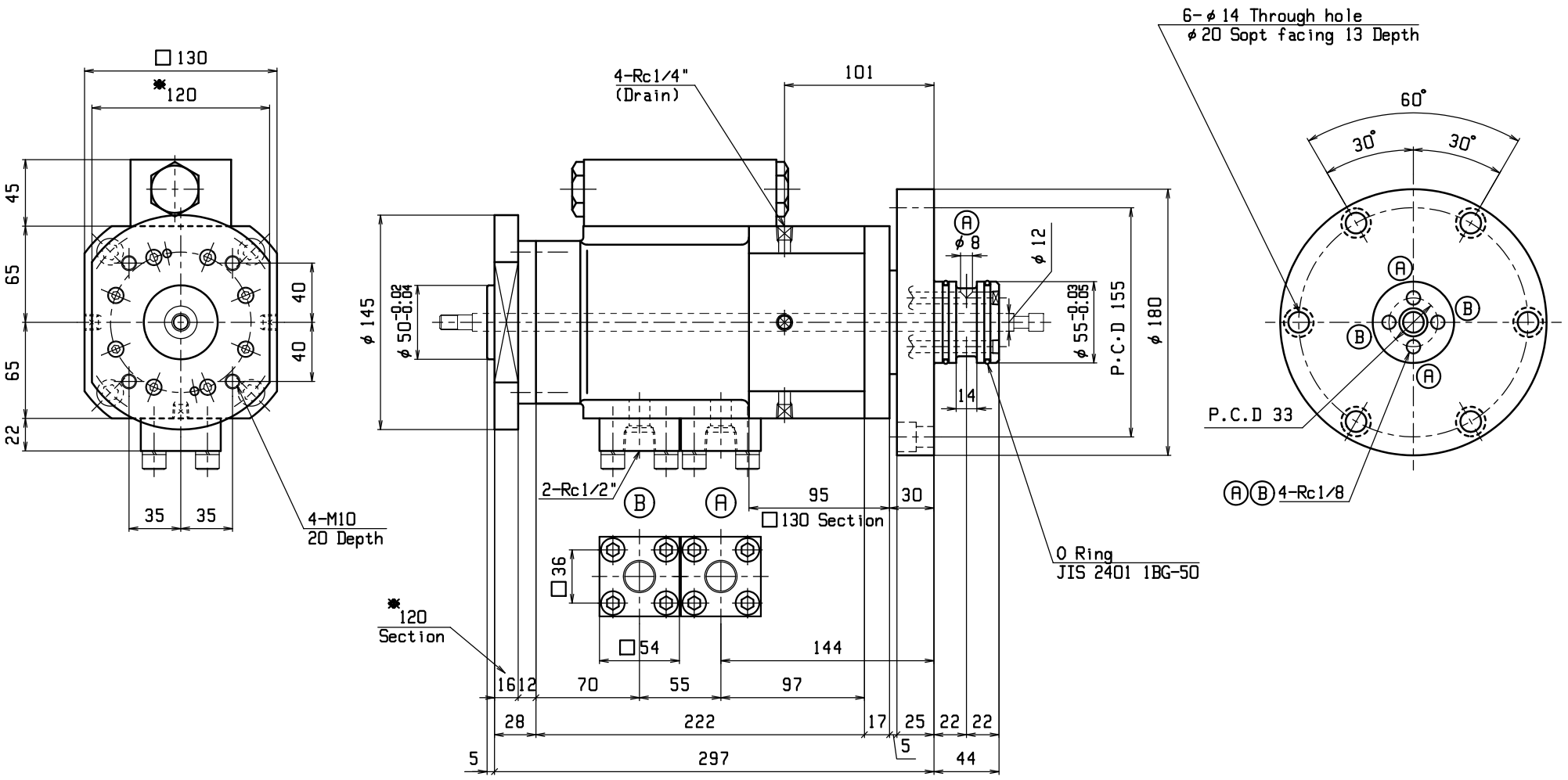

Specifications

Working Pressure : 13.7 MPa (140 kg/cm^2)
Test Pressure : 20.6 MPa (210 kg/cm^2)

Revision number	Modification	Date	Draw	Approval
△				
△				
△				

MFG. No.							
MFG. No.							
MFG. No.							
MFG. No.			Rotary Joint				
DELIVERY	Q'TY		N A M E	MAT'L	Q'TY/ ONE SET	REMARKS	

Scale 1/2	Messrs.	NAMBU STANDARD
	Model	New-AL Type
Approval	Feb.22,2010 S.Y.	Drawing No.
Check	Feb.18,2010 K.N.	RJ04-0700 △
Draw	Feb.18,2010 K.N.	

NAMBU CO., LTD.
TEL 81-3-3742-7377
FAX 81-3-3745-1021

A2