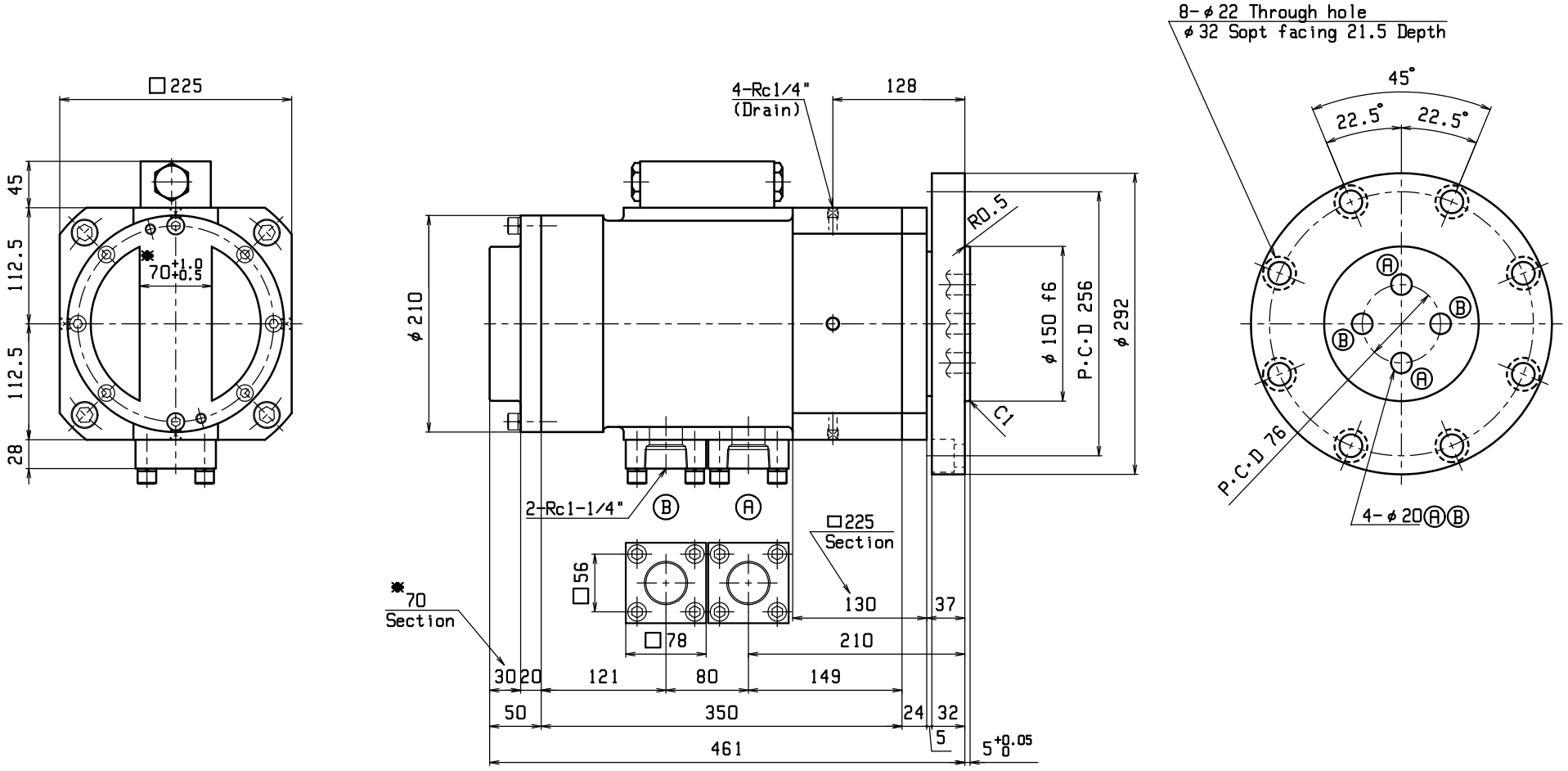

Specifications

Working Pressure : 13.7 MPa (140 kg/cm²)
Test Pressure : 20.6 MPa (210 kg/cm²)

revision number	Modification	Date / Draw	Date / Approval
△		Date	
△		Date	
△		Date	

MFG. No.						
MFG. No.						
MFG. No.						
MFG. No.		Rotary Joint				
DELI VERY	Q'TY	N A M E	MAT'L	Q'TY/ ONE SET	REMARKS	

Scale 1/3	Messrs. NAMBU STANDARD	
	Model New C Type	
Approval Feb.22,2010 S.Y.	Drawing No.	
Check Feb.18,2010 K.N.	RJ10-0500 △	
Draw Feb.18,2010 K.N.	NAMBU CO., LTD.	TEL 81-3-3742-7377 FAX 81-3-3745-1021

A2