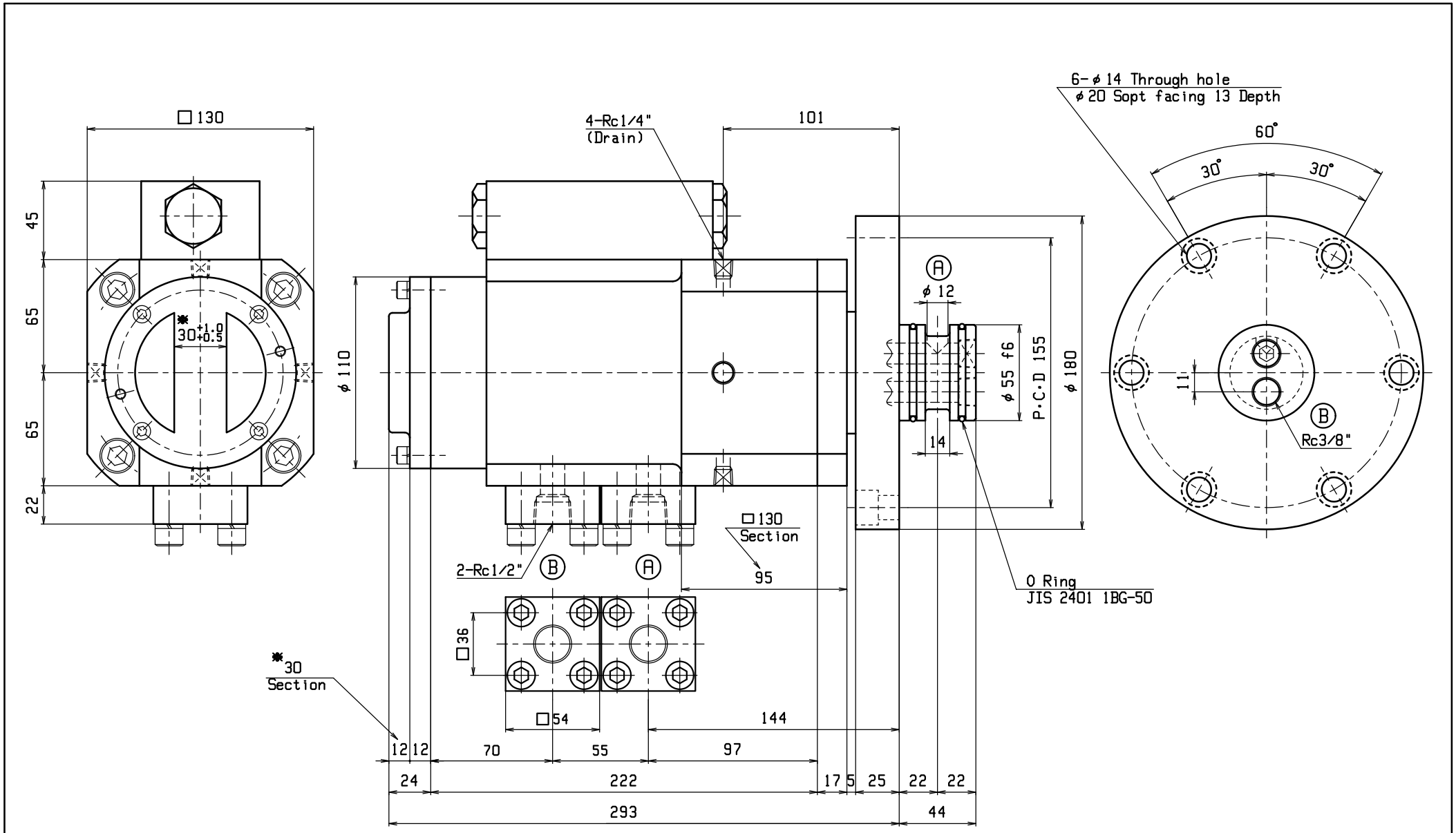

Specifications

Working Pressure : 13.7 MPa (140 kg/cm²)
Test Pressure : 20.6 MPa (210 kg/cm²)

Revision number	Modification	Date	Draw	Approval
△				
△				
△				

MFG. No.					
MFG. No.					
MFG. No.					
MFG. No.		Rotary Joint			
DELIVERY	Q'TY	N A M E	MAT'L	Q'TY/ONE SET	REMARKS

Scale 1/1.5	Messrs.	NAMBU STANDARD
	Model	New A-F Type
Approval Feb.22,2010 S.Y.	Drawing No.	RJ04-0600 △
Check Feb.18,2010 K.N.		
Draw Feb.18,2010 K.N.	NAMBU CO., LTD.	TEL 81-3-3742-7377 FAX 81-3-3745-1021

A2